expertbath

SHAWA A60

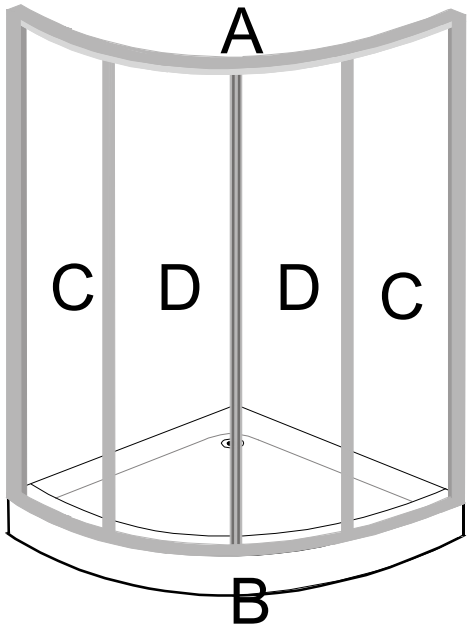

ISO 9002

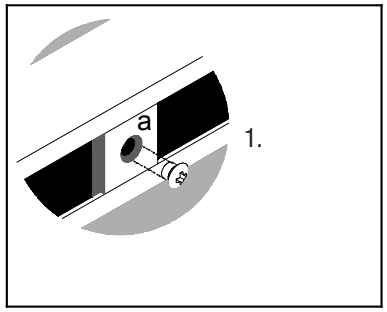
a
1.

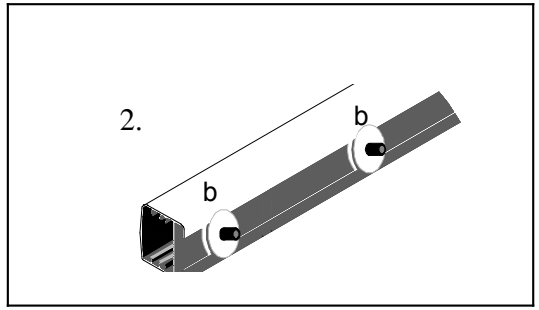
2.
b
b

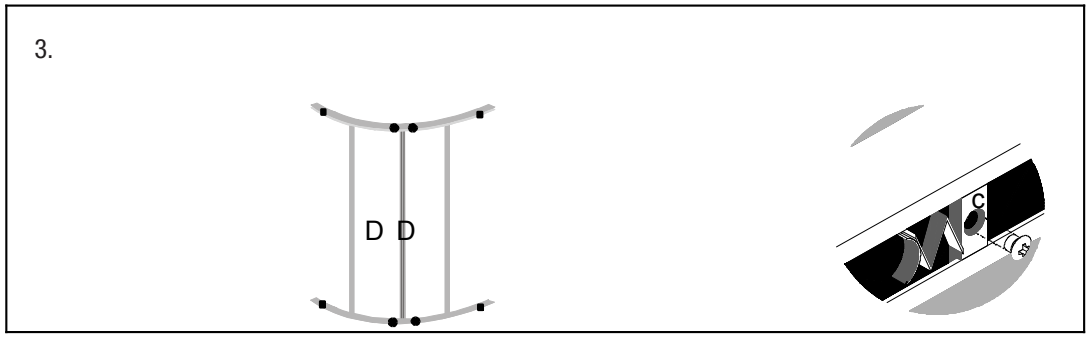
3.
D D
c

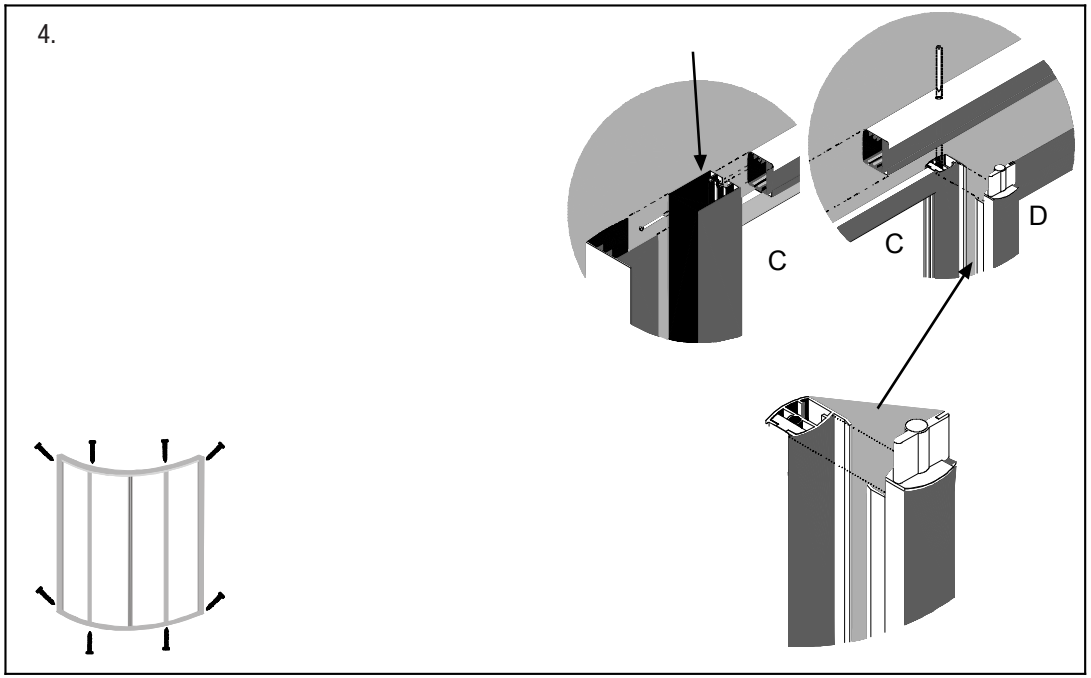
4.
C
C
D

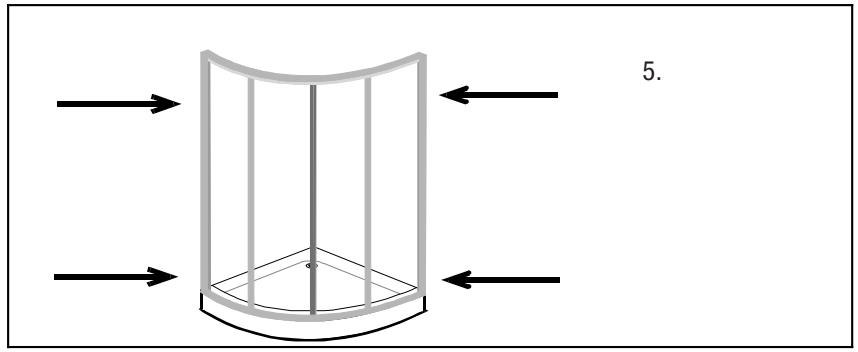
5.

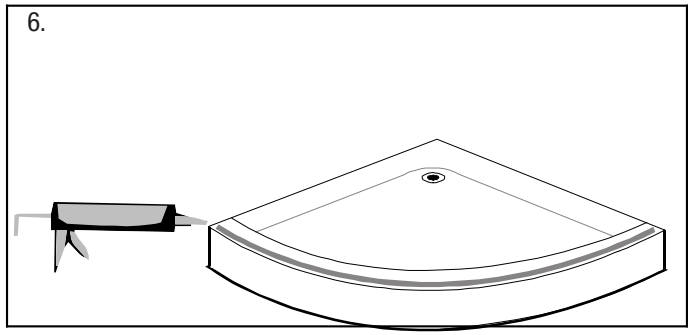
6.

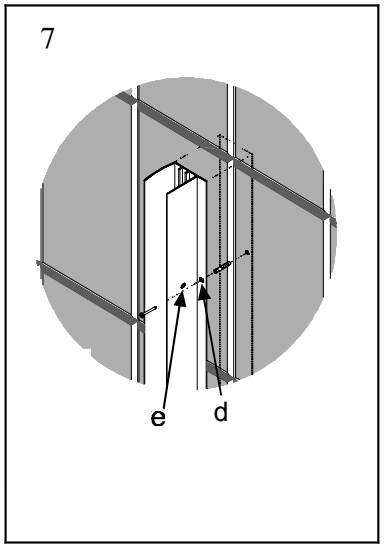
7
e
d

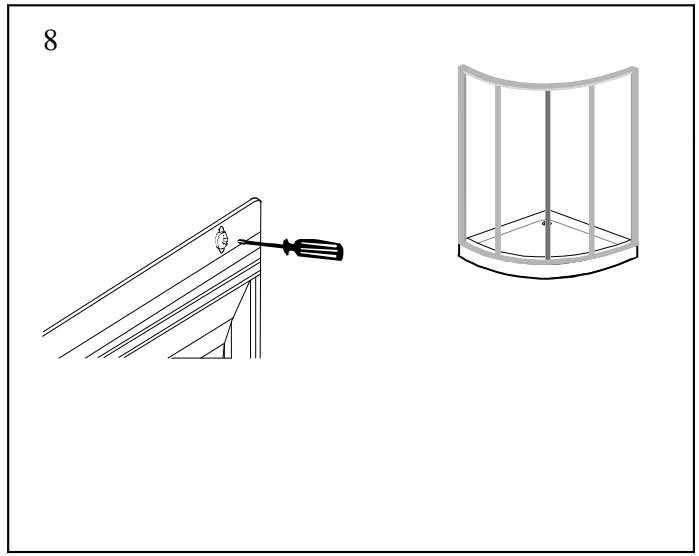
8